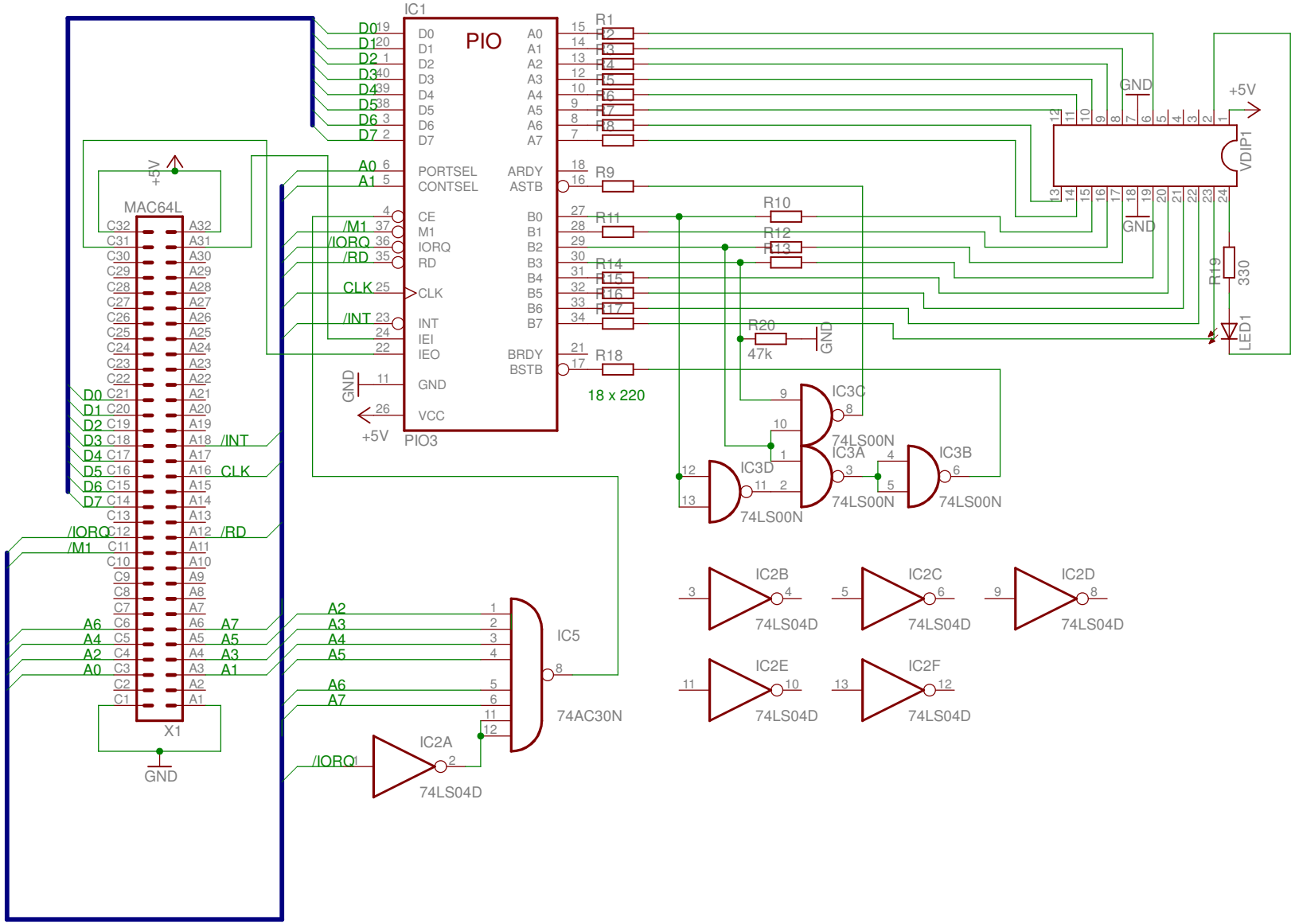
IC1
PIO
PIO3
D0
D1
D2
D3
D4
D5
D6
D7
A0
A1
PORTSEL
CONTSEL
CE
M1
IORQ
RD
CLK
INT
IEI
IEO
GND
VCC
ARDY
ASTB
BRDY
BSTB
B0
B1
B2
B3
B4
B5
B6
B7
/M1
/IORQ
/RD
/INT
+5V
R1
R2
R3
R4
R5
R6
R7
R8
R9
R10
R11
R12
R13
R14
R15
R16
R17
R18
18 x 220
R19
330
R20
47k
VDIP1
LED1
MAC64L
X1
IC2A
IC2B
IC2C
IC2D
IC2E
IC2F
74LS04D
IC3A
IC3B
IC3C
IC3D
74LS00N
IC5
74AC30N