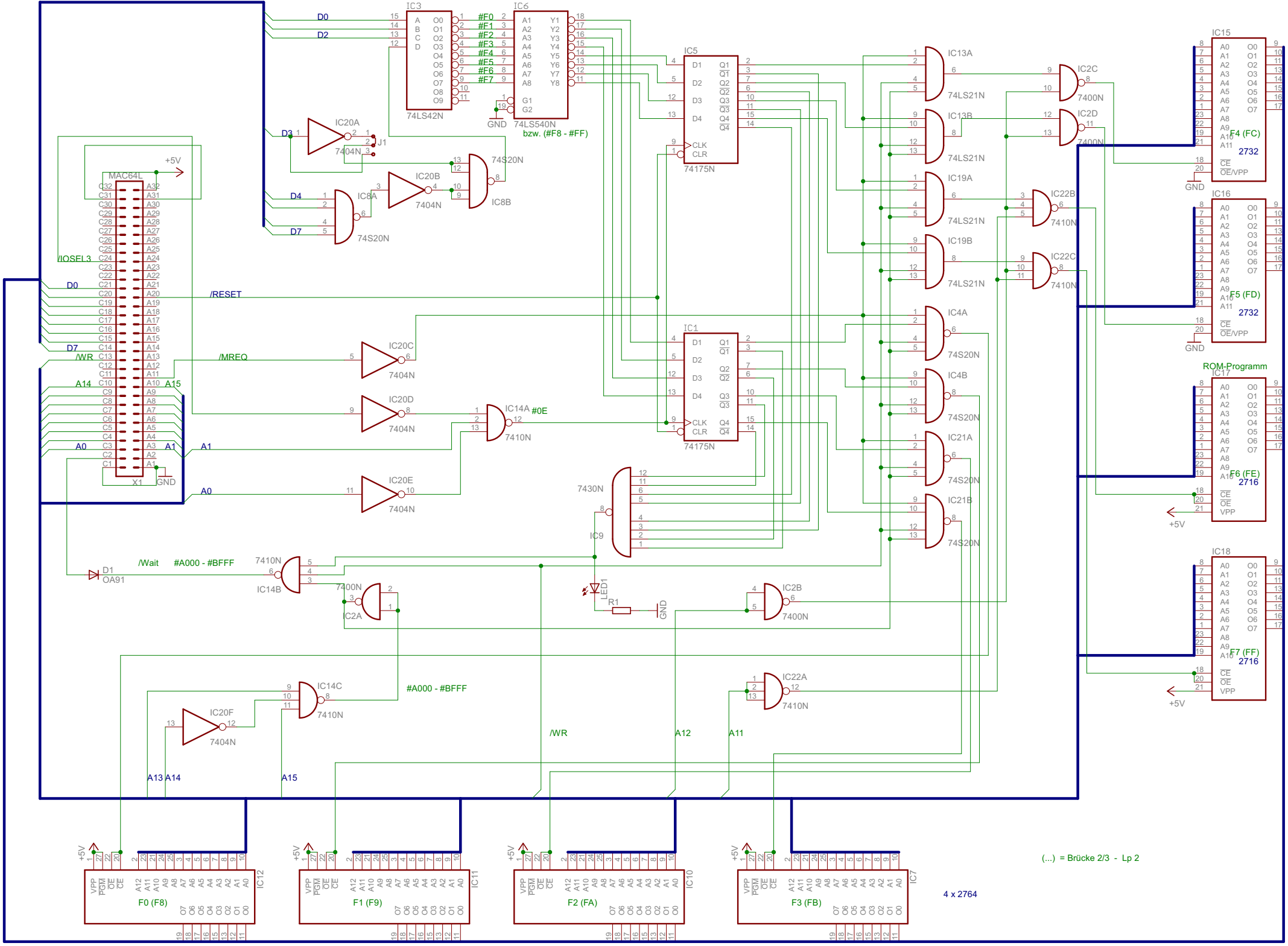
IC3
74LS42N
IC6
74LS540N
bzw. (#F8 - #FF)
IC5
74175N
IC1
74175N
IC20A
7404N
IC20B
7404N
IC8A
74S20N
IC8B
74S20N
IC20C
7404N
IC20D
7404N
IC14A
7410N
IC20E
7404N
MAC64L
X1
/IOSEL3
/RESET
/MREQ
/WR
A14
A15
A0
A1
D0
D1
D2
D3
D4
D7
+5V
GND
J1
D1
OA91
/Wait
#A000 - #BFFF
IC14B
7410N
IC2A
7400N
IC14C
7410N
IC20F
7404N
A13
A14
A15
7430N
IC9
LED1
R1
IC2B
7400N
IC22A
7410N
/WR
A12
A11
IC13A
74LS21N
IC13B
74LS21N
IC19A
74LS21N
IC19B
74LS21N
IC4A
74S20N
IC4B
74S20N
IC21A
74S20N
IC21B
74S20N
IC2C
7400N
IC2D
7400N
IC22B
7410N
IC22C
7410N
IC15
F4 (FC)
2732
IC16
F5 (FD)
2732
ROM-Programm
IC17
F6 (FE)
2716
IC18
F7 (FF)
2716
IC12
F0 (F8)
IC11
F1 (F9)
IC10
F2 (FA)
IC7
F3 (FB)
4 x 2764
(...) = Brücke 2/3 - Lp 2